DIM.	TOL
5mm DOWN	±0.2
5~20mm	±0.3
20~40mm	±0.4
40~60mm	±0.5
60~100mm	±0.8
100mm UP	±1.0

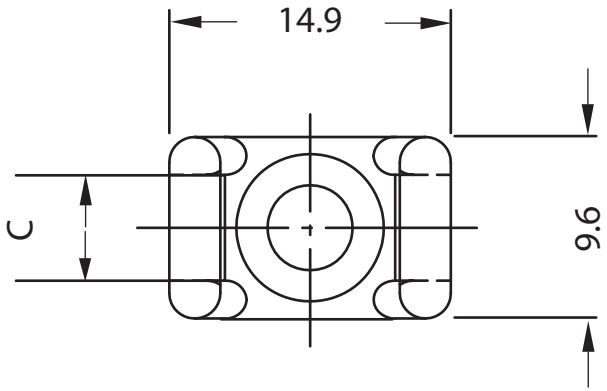

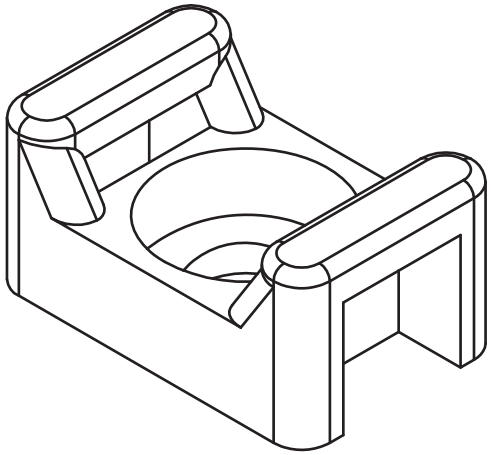

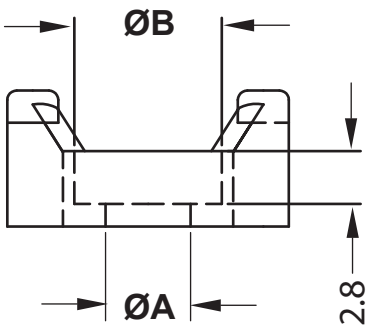

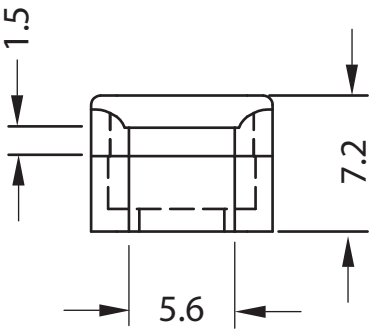

PART NO.	A	B	C
3978AD08	3,7	7,0	5,0

SILICON FREE

HALOGEN FREE

RoHS compliant

	DESCRIPTION	
	MATERIAL: PA 6.6 with metallic pigments HB (UL 94)	
	Temperatur Range -40°C to +85°C	
	COLOR: BLU	
REV.		DATE

TITLE: **Cable Tie Holder**

Modelled in RHINO 4.0

TOLLERANCES UNLESS NOTED
.XX= +/-010
.XXX= +/-005
FRAC.=+/- 1/64
ANG.=+/-1°

FILE:
SHEET: 1 OF 1
SCALE: NTS

DwN: 26/02/24
DT: 24.02.26.3978.D.E

DWG UNIT: MM
ChkD:
Part Number: 3978AD08

fastpoint