DIM.	TOL.
5mm DOWN	±0.2
5~20mm	±0.3
20~40mm	±0.4
40~60mm	±0.5
60~100mm	±0.8
100mm UP	±1.0

REVISIONS			
REV	DESCRIPTION	DATE	BY

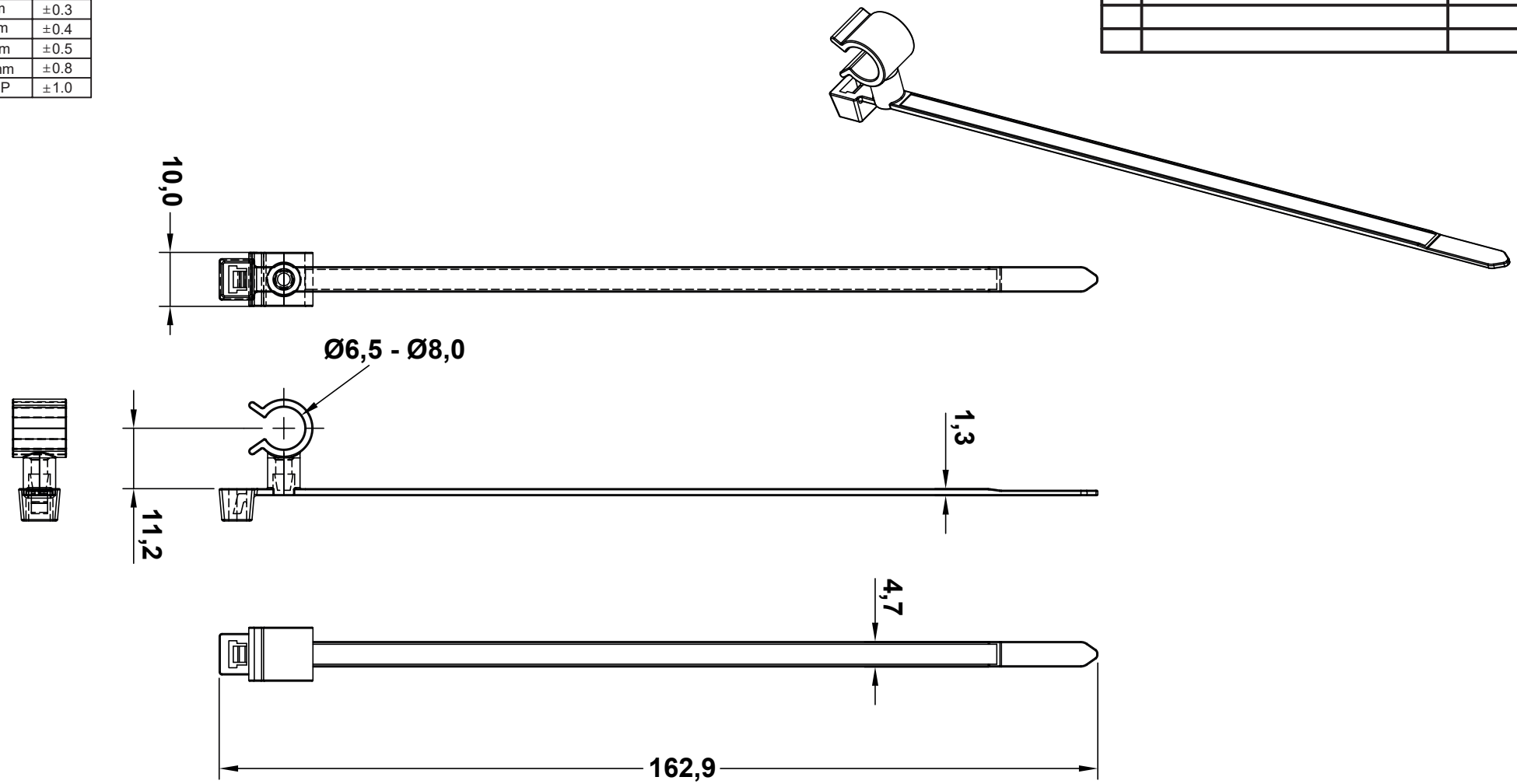

BUNDLE DIAMETER: MAX Ø35,0

PULL FORCE ≥ 150N

	DESCRIPTION	
	MATERIAL: PA 6.6	
	COLOUR: BLACK	
REV.		DATE

TITLE: **CABLE TIES**

Modelled in RHINO 4.0

TOLLERANCES UNLESS NOTED

SEE ABOVE

FILE:

SHEET: 1 OF 1

SCALE: NTS

DwN: 11/06/19

DT:19.06.11.12969.0.E

DWG UNIT: MM

ChkD:

Part Number: 12969AA01

fastpoint