REVISIONS			
REV	DESCRIPTION	DATE	BY

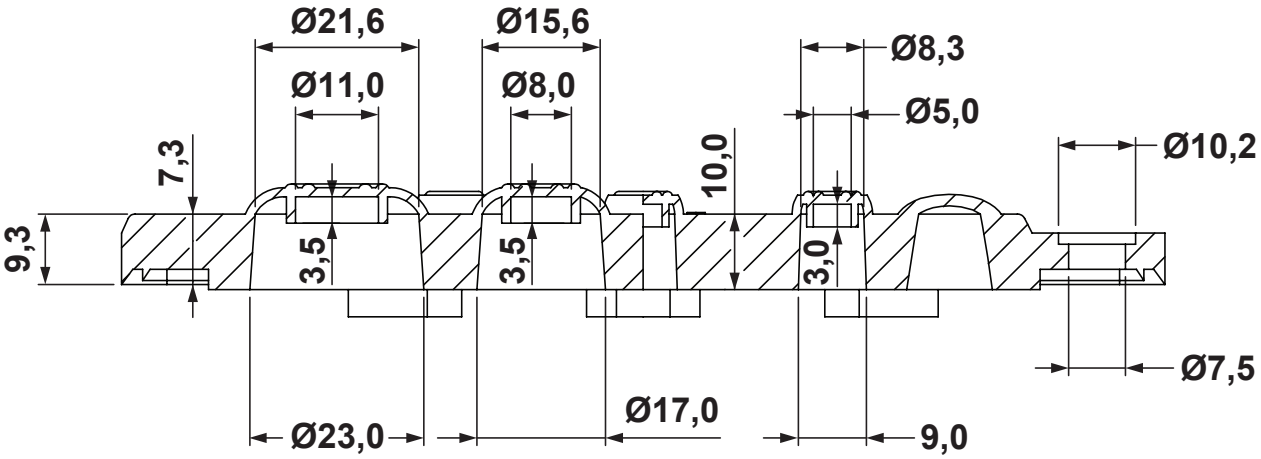

SECTION A-A

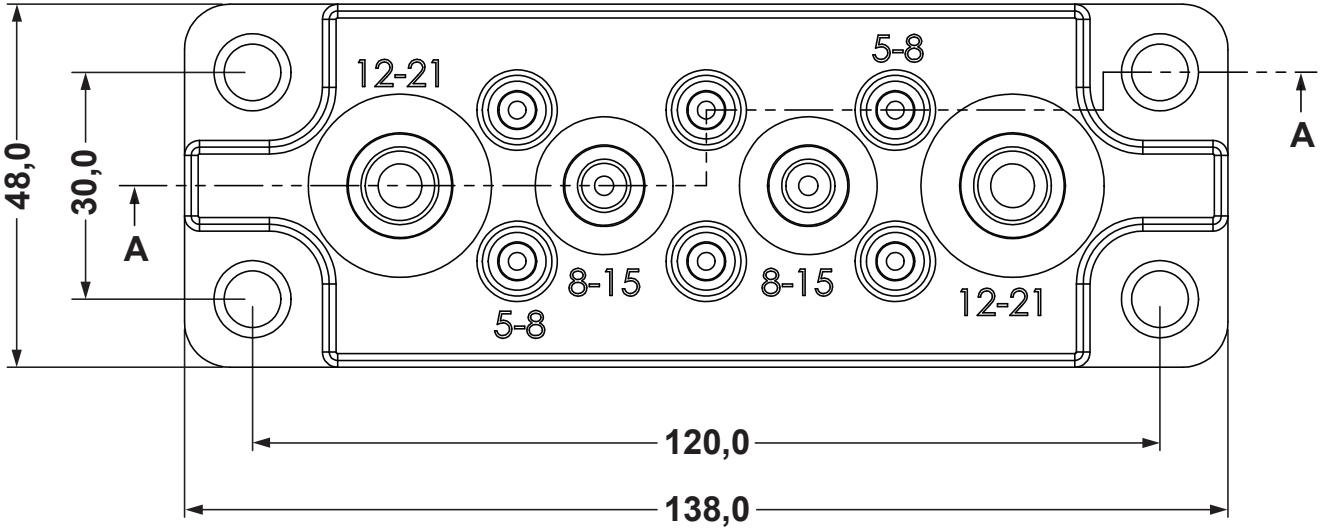

NOTES:

Working temperature: -40°C/+130°C

Measurements B-hole:
138mmx48mm
Fastening hole: 7,5 mm
Fastening holes distance: 120 mm / 30 mm

Lead-throught:
2x12mm-21mm
2x8mm-15mm
6x5mm-8mm
max 10 cabels

Halogen-free / oil splatter resistant / in and outdoor

Protection index IP65

	DESCRIPTION		TITLE: **MODULAR GLAND PLATES IP 65 – PRECONFIGURATE**			DWG UNIT: MM
	MATERIAL: TPE – SEBS 50 Sha		*Modelled in RHINO 4.0*	FILE: 09/04/20	DwN:	ChkD:
	COLOUR: GREY RAL 7035		TOLLERANCES UNLESS NOTED	SHEET: 1 OF 1	DT:20.04.09.12102.E.0	Part Number: 12102PF117035
			2768-mK	SCALE: 1:1	fastpoint	
REV.		DATE				