REVISIONS			
REV	DESCRIPTION	DATE	BY

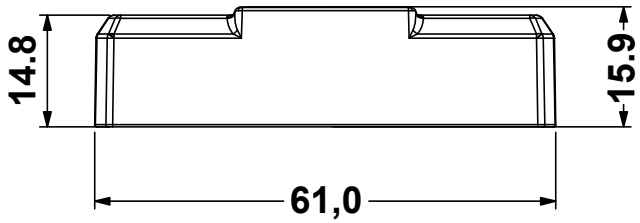

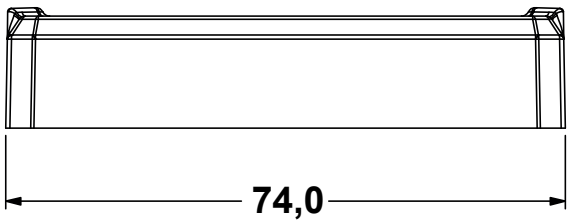

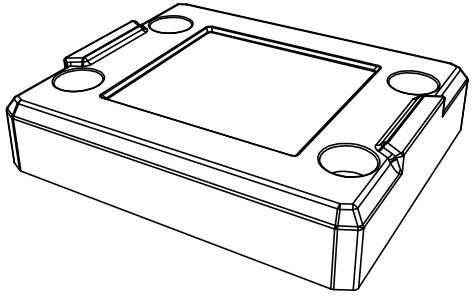

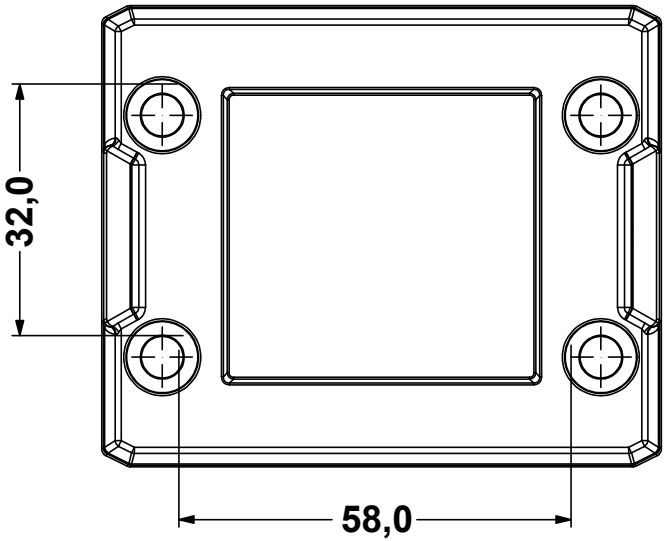

Recommended cut-out:
40 x 39 mm

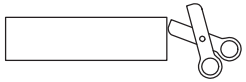

Flammability: UL94-V0, self-extinguishing
Temperature: -40°C … +155°C
Properties: halogen-free, silicone-free

UV ISO 4892-2A | RoHS COMPLIANT | IP54

	DESCRIPTION	
	MATERIAL: PP + GF	
	COLOUR: BLACK	
REV.		DATE

TITLE: **CLOSING PLATES**

Modelled in RHINO 4.0

TOLLERANCES UNLESS NOTED

FILE:

SHEET: 1 OF 1

SCALE: 1:1

DwN: 05/09/19

DT:19.09.05.16014.0.E

DWG UNIT: MM

ChkD:

Part Number: 16014FG01

fastpoint