DIM.	TOL.
5mm DOWN	±0.2
5～20mm	±0.3
20～40mm	±0.4
40～60mm	±0.5
60～100mm	±0.8
100mm UP	±1.0

REVISIONS			
REV	DESCRIPTION	DATE	BY

P/N	A
10048AA0103.0	3.0
10048AA0104.0	4.0
10048AA0105.0	5.0
10048AA0106.0	6.0
10048AA0107.0	7.0
10048AA0108.0	8.0
10048AA0109.0	9.0
10048AA0110.0	10.0
10048AA0111.0	11.0
10048AA0112.0	12.0
10048AA0113.0	13.0
10048AA0114.0	14.0
10048AA0115.0	15.0
10048AA0116.0	16.0
10048AA0117.0	17.0
10048AA0118.0	18.0
10048AA0119.0	19.0
10048AA0120.0	20.0
10048AA0121.0	21.0
10048AA0122.0	22.0
10048AA0123.0	23.0
10048AA0124.0	24.0
10048AA0125.0	25.0
10048AA0126.0	26.0
10048AA0127.0	27.0

P/N	A
10048AA0128.0	28.0
10048AA0129.0	29.0
10048AA0130.0	30.0
10048AA0131.0	31.0
10048AA0132.0	32.0
10048AA0133.0	33.0
10048AA0134.0	34.0
10048AA0135.0	35.0
10048AA0136.0	36.0
10048AA0137.0	37.0
10048AA0138.0	38.0
10048AA0139.0	39.0
10048AA0140.0	40.0
10048AA0141.0	41.0
10048AA0142.0	42.0
10048AA0143.0	43.0
10048AA0144.0	44.0
10048AA0145.0	45.0
10048AA0146.0	46.0
10048AA0147.0	47.0
10048AA0148.0	48.0
10048AA0149.0	49.0
10048AA0150.0	50.0
10048AA0151.0	51.0
10048AA0152.0	52.0

P/N	A
10048AA0153.0	53.0
10048AA0154.0	54.0
10048AA0155.0	55.0
10048AA0156.0	56.0
10048AA0157.0	57.0
10048AA0158.0	58.0
10048AA0159.0	59.0
10048AA0160.0	60.0
10048AA0161.0	61.0
10048AA0162.0	62.0
10048AA0163.0	63.0
10048AA0164.0	64.0
10048AA0165.0	65.0

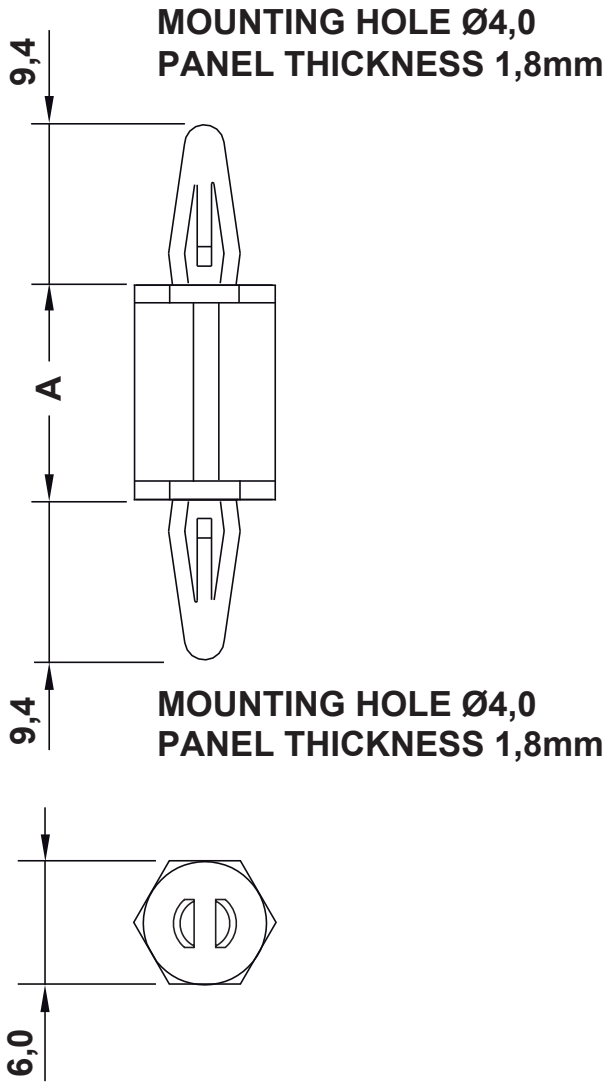

	DESCRIPTION	
	MATERIAL: PA 66 HB(UL94)	
	COLOUR: BLACK	
	WORKING TEMPERATURE: -35°C ~ +130°C	
REV.		DATE

TITLE: **DUAL LOCKING P.C.B SPACER**

DWG UNIT: MM

Modelled in RHINO 4.0

TOLLERANCES UNLESS NOTED: SEE ABOVE

FILE:

SHEET: 1 OF 1

SCALE: NTS

DwN: 19/05/22

DT: 22.05.19.10048.0.E.

ChkD:

Part Number: SEE TABLE

fastpoint