DIM.	TOL.
5mm DOWN	±0.2
5~20mm	±0.3
20~40mm	±0.4
40~60mm	±0.5
60~100mm	±0.8
100mm UP	±1.0

RoHS compliant

HALOGEN FREE

REVISIONS			
REV	DESCRIPTION	DATE	BY

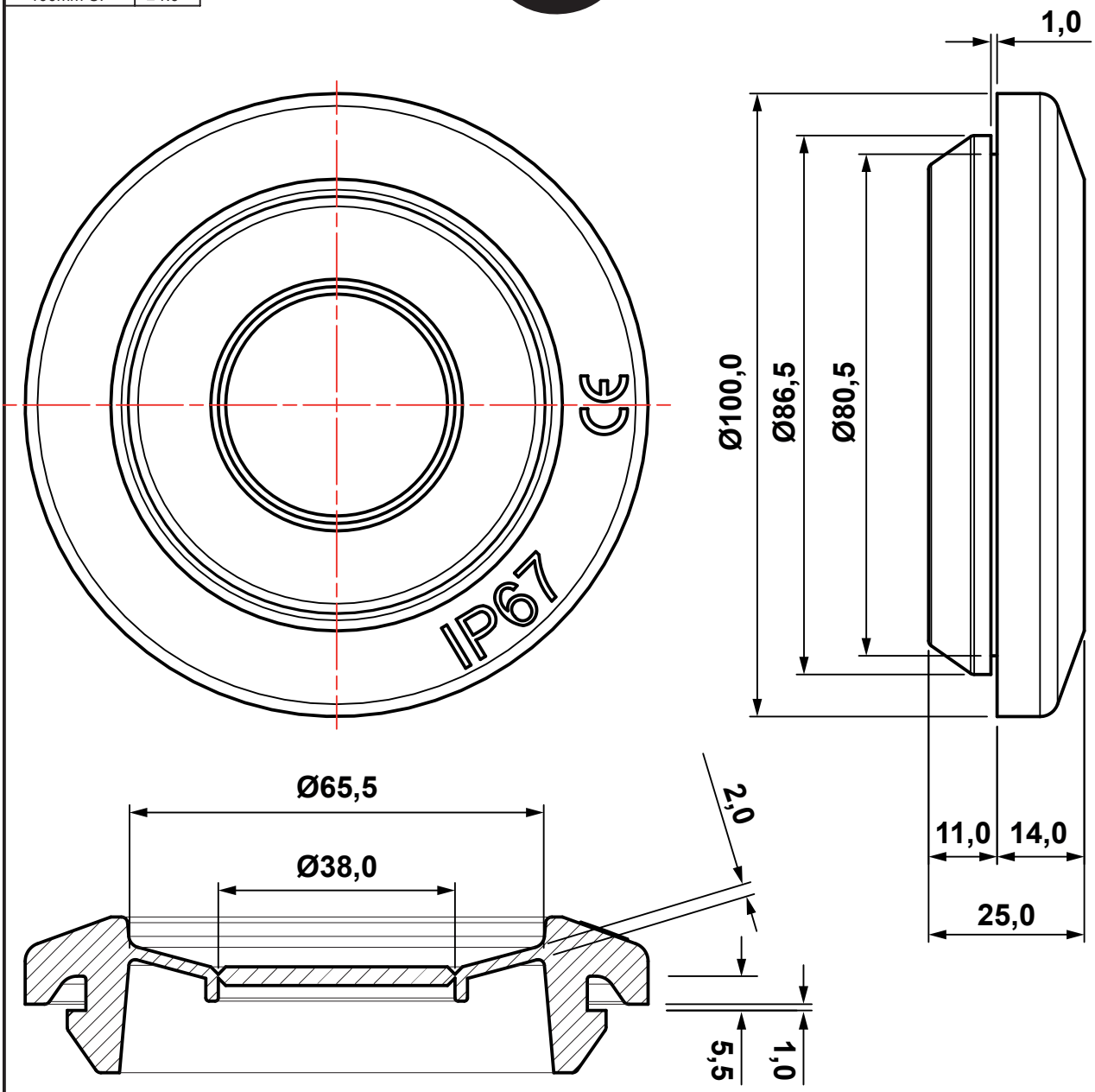

MAX. PANEL THICKNESS: MIN. 1,0 ... MAX. 5,5
HOLE PANEL: 80,5
WORKING TEMPERATURE: -40°C ... + 130°C
PROTECTION IP67

P/N	color	material
22008PF019011	RAL 9011	TPE-SEBS
22008PF119010	RAL 9010	TPE-SEBS
22008PF117035	RAL 7035	TPE-SEBS
22008PV02	WHITE	TPE-SEBS V0

fastpoint

TITLE	GROMMET
MATERIAL	SEE ABOVE
DATE	06/04/2022
	DRAWN A.C.
PART NUMBER	SEE ABOVE
DRAWING NUMBER	22.04.06.22008.0.E
COLOR	SEE ABOVE
CHECK	
SIZE	A4
SCALE	1:1
UNIT	mm.
REV	A
UNLESS OTHERWISE SPECIFIED TOLERANCE	SEE ABOVE
APPROVED	