REVISIONS			
REV	DESCRIPTION	DATE	BY

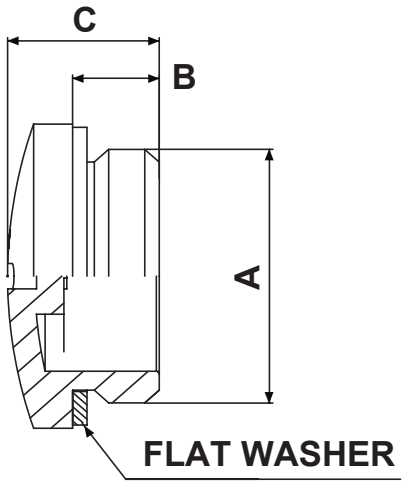

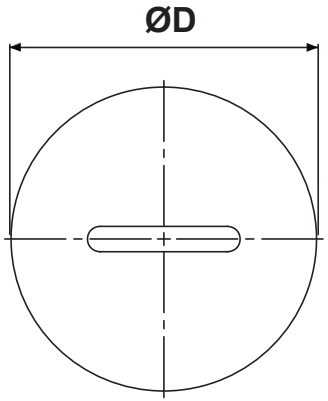

PROTECTION GRADE: IP65

METRIC ACCORDING EN 60423

P/N RAL 7001	P/N RAL 7035	P/N RAL 9005	A	B	C	D
8881AA117001	**8881AA117035**	**8881AA019005**	M12x1,5	6,0	10,0	15,0
8882AA117001	**8882AA117035**	**8882AA019005**	M16x1,5	6,0	10,5	20,0
8883AA117001	**8883AA117035**	**8883AA019005**	M20x1,5	6,0	10,5	24,0
8884AA117001	**8884AA117035**	**8884AA019005**	M25x1,5	8,0	13,0	30,0
8885AA117001	**8885AA117035**	**8885AA019005**	M32x1,5	8,0	13,5	37,0
8886AA117001	**8886AA117035**	**8886AA019005**	M40x1,5	8,0	14,0	46,0
8887AA117001	**8887AA117035**	**8887AA019005**	M50x1,5	10,0	16,5	56,0
8888AA117001	**8888AA117035**	**8888AA019005**	M63x1,5	12,0	17,0	70,0

DESCRIPTION

MATERIAL: PA 6 HB(UL94)

COLOUR: SEE TABLE

WORKING TEMPERATURE: -30°C ~ +100°C

REV. DATE

TITLE: **METRIC THREAD SCREW PLUG IP65**

DWG UNIT: MM

Modelled in RHINO 4.0

FILE:

DwN: 06/05/21

ChkD:

TOLLERANCES UNLESS NOTED

SEE ABOVE

SHEET: 1 OF 1

DT:21.05.06.XXXX.0.E

Part Number: SEE TABLE

SCALE: NTS

fastpoint