REVISIONS			
REV	DESCRIPTION	DATE	BY

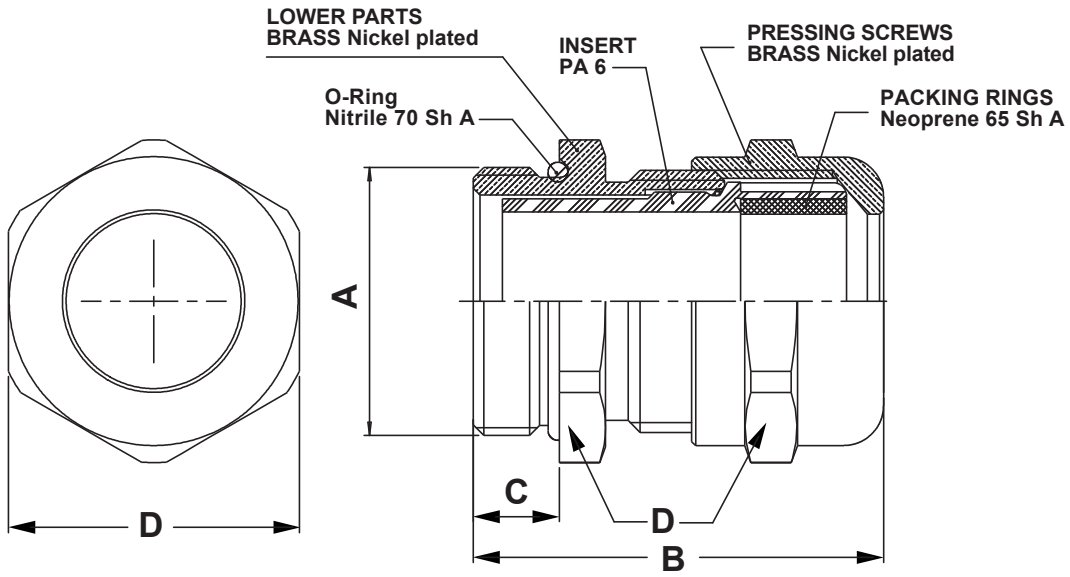

Standard Sealing

IP 68

Permanent temperature on application - 40 / + 100℃

P/N	A	B	C	D	Cable diameter
15172MA92	PG 7	25,0	5,0	14,0	2,5 - 6,5
15173MA92	PG 9	29,0	6,0	17,0	4,0 - 9,5
15174MA92	PG 11	30,0	6,0	20,0	6,0 - 11,5
15175MA92	PG 13	32,5	6,5	22,0	7,0 - 13,0
15176MA92	PG 16	34,0	6,5	24,0	8,0 - 15,0
15177MA92	PG 21	35,0	7,0	30,0	11,0 - 19,0
15178MA92	PG29	38,0	8,0	40,0	16,0 - 26,0
15179MA92	PG36	42,0	9,0	50,0	22,0 - 34,5
15180MA92	PG42	47,0	10,0	58,0	27,0 - 40,0
15181MA92	PG48 DIN	54,0	10,0	65,0	35,0 - 48,0

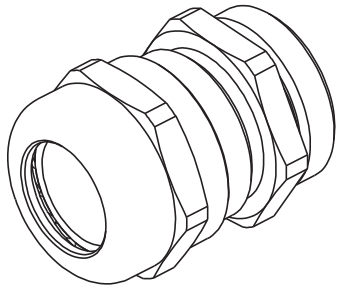

DESCRIPTION	
MATERIAL:	SEE ABOVE
COLOUR:	SEE ABOVE
REV.	DATE

TITLE: **PG THREAD BRASS CABLE GLANDS**

Modelled in RHINO 4.0

TOLLERANCES UNLESS NOTED

SEE ABOVE

FILE:

SHEET: 1 OF 1

SCALE: NTS

DwN: 02/03/21

DT: 21.03.02.151XX.0.E

DWG UNIT: MM

ChkD:

Part Number: SEE TABLE

fastpoint