REVISIONS			
REV	DESCRIPTION	DATE	BY

RoHS COMPLIANT

Standard Sealing

IP54

Permanent temperature on application

NITRILE 70 Sh A
- 25 / + 120°C

IP 68 With O-Ring (OPTIONAL)

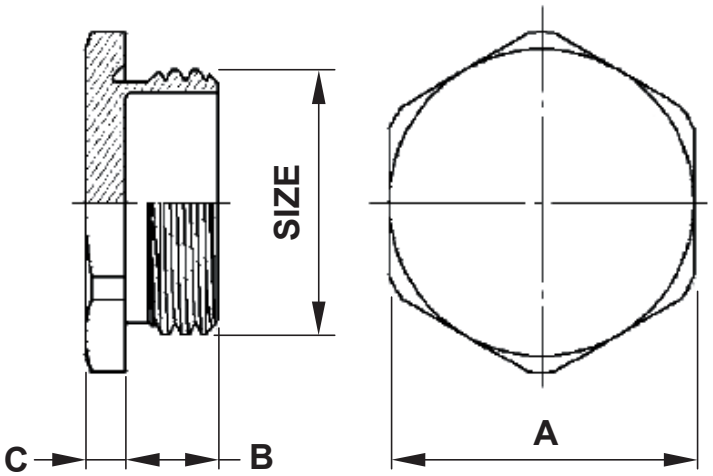

P/N	SIZE	A	B	C
15201MA92	M12	14,0	7,0	3,0
15202MA92	M16	17,0	7,0	3,0
15203MA92	M20	23,0	7,0	3,0
15204MA92	M25	29,0	8,0	3,5
15205MA92	M32	39,0	8,5	4,0
15206MA92	M40	45,0	8,5	4,0
15207MA92	M50	58,0	9,5	5,0
15208MA92	M63	70,0	10,5	7,0
15209MA92	M75	80,0	11,5	8,0

fastpoint

TITLE **HEXAGONAL PLUGS ISO IP54**			
MATERIAL NICKEL PLATED BRASS		DATE 25/02/2021	
		DRAWN R.F.	
COLOR SEE ABOVE		CHECK	
UNLESS OTHERWISE SPECIFIED TOLERANCE SEE ABOVE		APPROVED	
PART NUMBER SEE TABLE	DRAWING NUMBER 21.02.25.1520X.0.E		
SIZE A4	SCALE NTS	UNIT mm.	REV A