REVISIONS			
REV	DESCRIPTION	DATE	BY

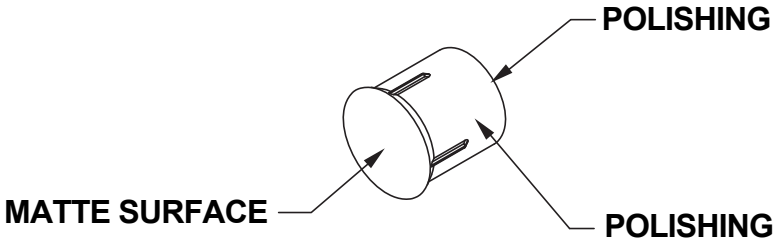

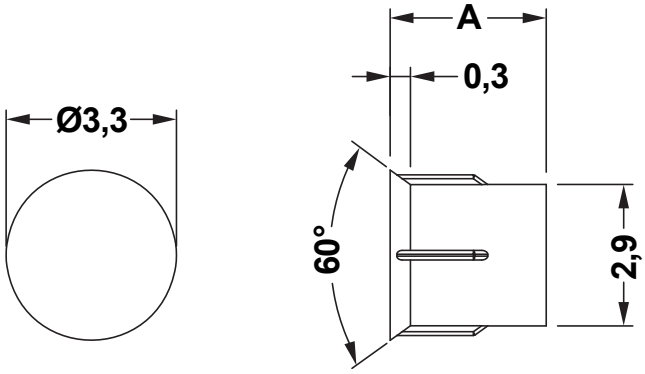

MOUNTING HOLE Ø3,07

P/N	A
14524NV00	2,5
14525NV00	3,0
14526NV00	3,2
14527NV00	5,0
14528NV00	6,0
14529NV00	8,0
14530NV00	9,5
14531NV00	10,0
14532NV00	12,7

fastpoint

TITLE	LED LIGHT PIPE		
MATERIAL	PC V0(UL94)	DATE	29/04/2020
		DRAWN	R.F.
COLOR	CLEAR	CHECK	
UNLESS OTHERWISE SPECIFIED TOLERANCE	SEE ABOVE	APPROVED	

PART NUMBER	DRAWING NUMBER		
SEE TABLE	20.04.29.145XX.0.E		
SIZE A4	SCALE NTS	UNIT mm.	REV A