| Dimensions | Tollerance |
|---|---|
| L≤10 | ±0.2 |
| 10<L≤30 | ±0.3 |
| 30<L≤50 | ±0.5 |
| 50<L≤100 | ±0.7 |
| 100<L≤250 | ±1.2 |
| ABOVE 250 | ±1.5 |

| REVISIONS | | | |
|---|---|---|---|
| REV | DESCRIPTION | DATE | BY |
| | | | |
| | | | |

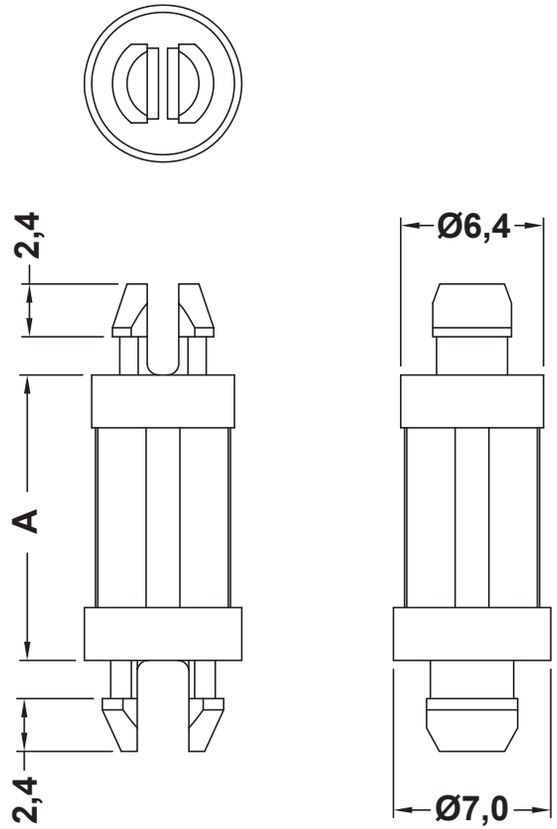


**P.C.B. HOLE: Ø 4,0**
**P.C.B. THICKNESS: 1,6**

**P.C.B. HOLE: Ø 4,0**
**P.C.B. THICKNESS: 1,6**

| P/N | A |
|---|---|
| 13263AA00 | 4,8 |
| 9470AA00 | 6,4 |
| 9471AA00 | 9,5 |
| 9472AA00 | 10,0 |
| 9473AA00 | 12,7 |
| 9474AA00 | 15,9 |
| 9475AA00 | 19,1 |
| 9476AA00 | 22,2 |
| 9477AA00 | 25,4 |

| | DESCRIPTION | |
|---|---|---|
| | MATERIAL: PA 66 V2(UL94) | |
| | COLOUR: NATURAL | |
| REV. | | DATE |

TITLE: **P.C.B. SPACERS**

DWG UNIT: MM

*Modelled in RHINO 4.0*

FILE:

DwN: 24/02/20

ChkD:

TOLLERANCES UNLESS NOTED

**SEE ABOVE**

SHEET: 1 OF 1

DT:20.02.24.XXXX.E.0

Part Number: SEE TABLE

SCALE:

**NTS**

fastpoint