DIM.	TOL.
5mm DOWN	±0.2
5～20mm	±0.3
20～40mm	±0.4
40～60mm	±0.5
60～100mm	±0.8
100mm UP	±1.0

REVISIONS			
REV	DESCRIPTION	DATE	BY

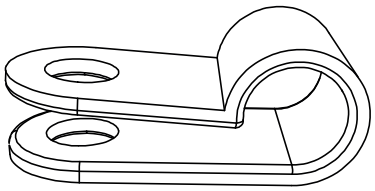

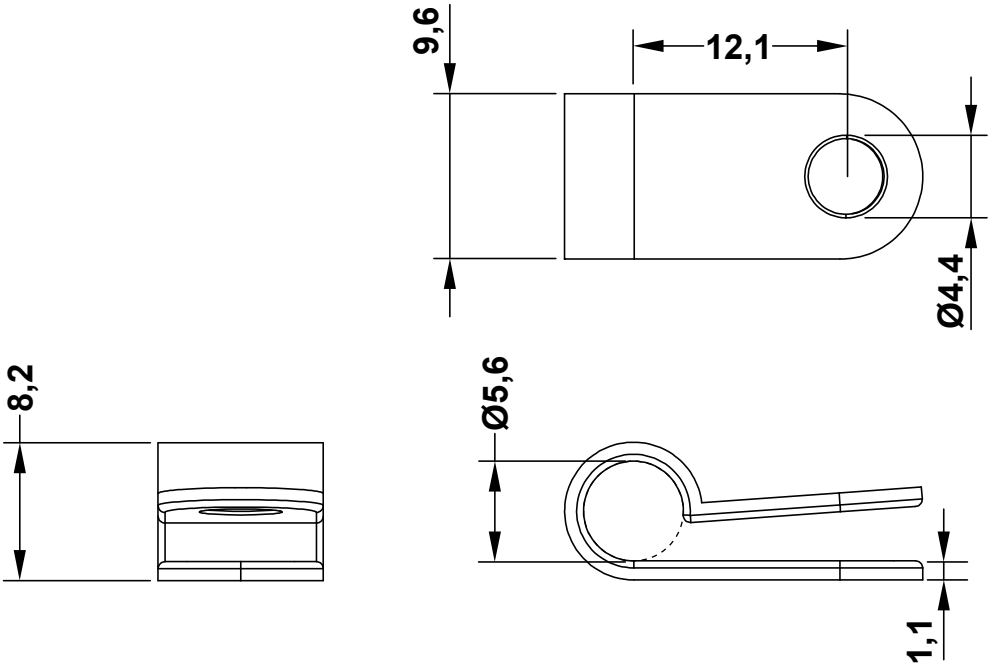

fastpoint

TITLE
WIRE & PIPE CLIPS

MATERIAL: PA 66 V2(UL94)	DATE: 11/04/2019
	DRAWN: R.F.
COLOR: NATURAL	CHECK:
UNLESS OTHERWISE SPECIFIED TOLERANCE: SEE ABOVE	APPROVED:

PART NUMBER	DRAWING NUMBER		
6570AA00	19.04.11.6570.0.E		
SIZE: A4	SCALE: NTS	UNIT: mm.	REV: A