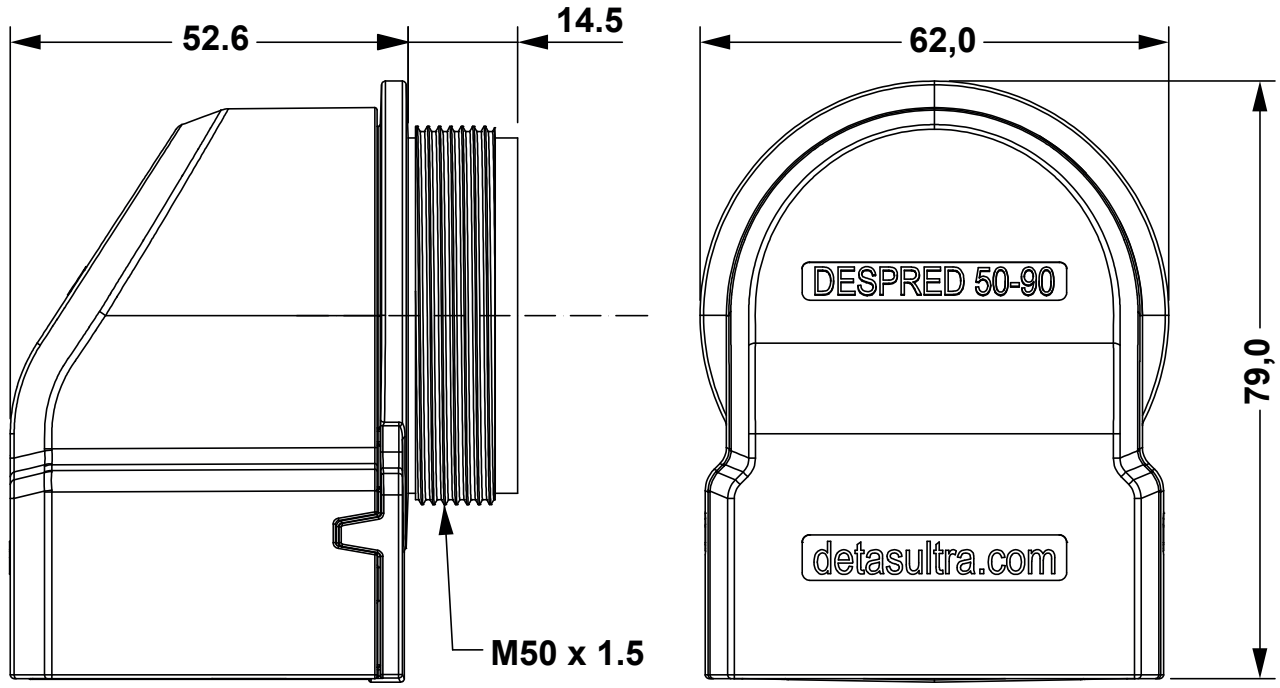

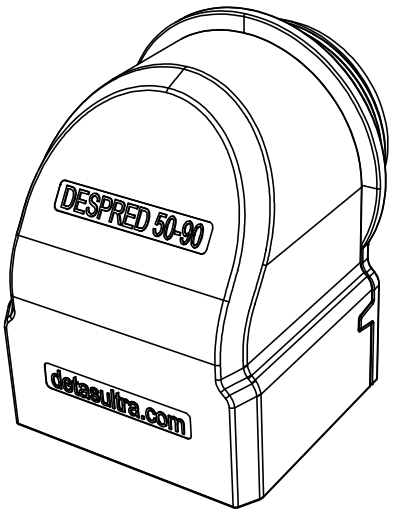

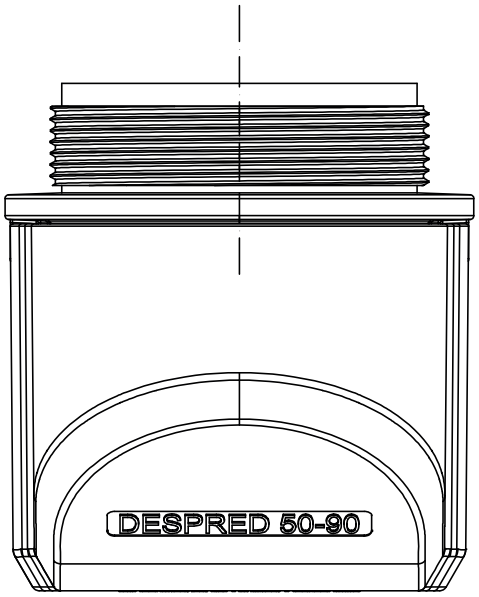

UV ISO 4892-2A	RoHS COMPLIANT	c UL us pending	IP54	NEMA 12	IK10

Recommended cut-out:
Ø 50.5

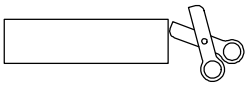

Flammability: UL94-V0, self-extinguishing
Temperature: -40°C … +155°C
Properties: halogen-free, silicone-free

SUPPLIER PRODUCT NUMBER: 1731050250

fastpoint

TITLE	SPLITTABLE CABLE GLAND AND LOCKNUT WITH 90° ENTRY		
MATERIAL	PA	DATE	10/09/2019
		DRAWN	R.F.
COLOUR FRAME	BLACK	CHECK	
UNLESS OTHERWISE SPECIFIED TOLERANCE		APPROVED	

PART NUMBER	16021FG01	DRAWING NUMBER	19.09.10.16021.0.E
SIZE A4	SCALE 1:1	UNIT mm.	REV A