REVISIONS			
REV	DESCRIPTION	DATE	BY

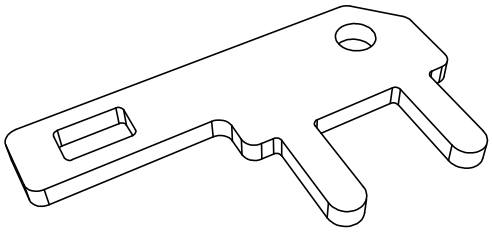

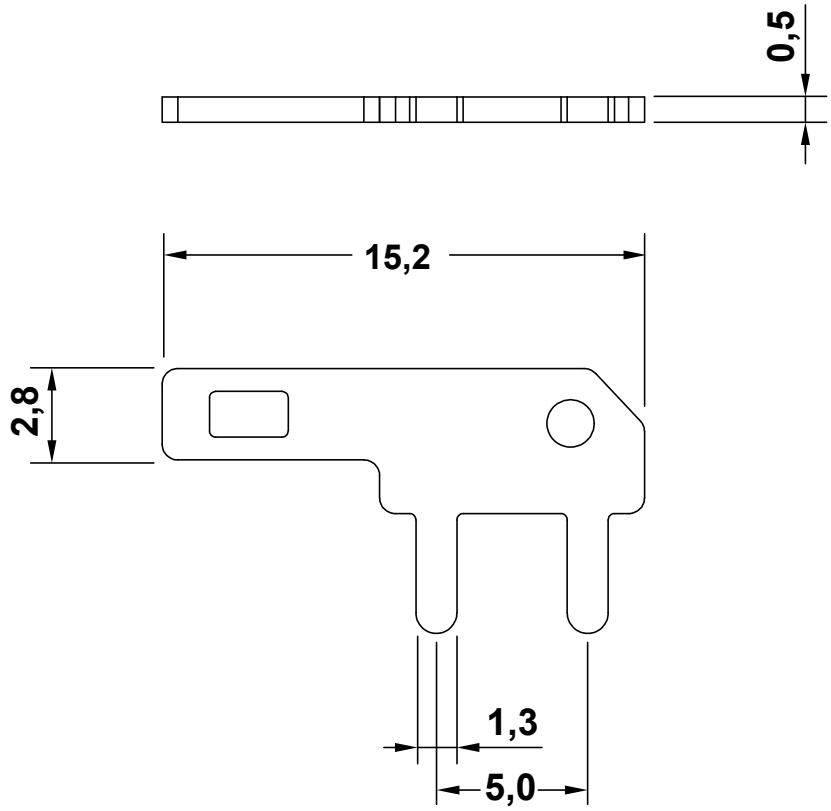

fastpoint

TITLE **TABS FOR P.C.B.**

MATERIAL: TIN-PLATED BRASS	DATE: 22/05/2019
	DRAWN: R.F.
	CHECK:
UNLESS OTHERWISE SPECIFIED TOLERANCE	APPROVED:

PART NUMBER	DRAWING NUMBER		
0902MA91	19.05.22.0902.0.E		
SIZE: A4	SCALE: NTS	UNIT: mm.	REV: A