REVISIONS			
REV	DESCRIPTION	DATE	BY

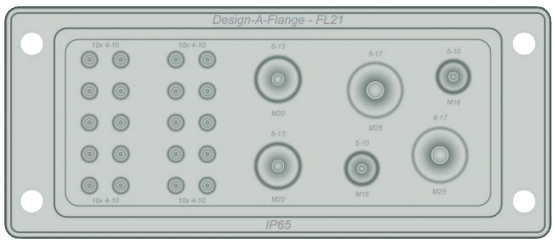

Halogen Free

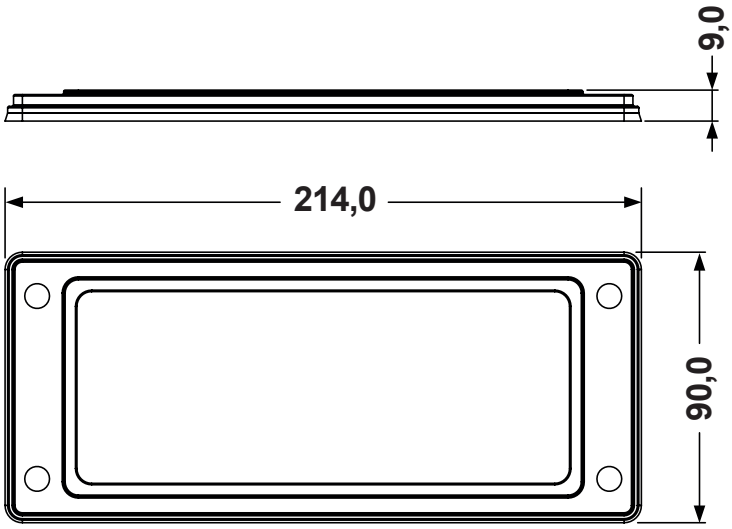

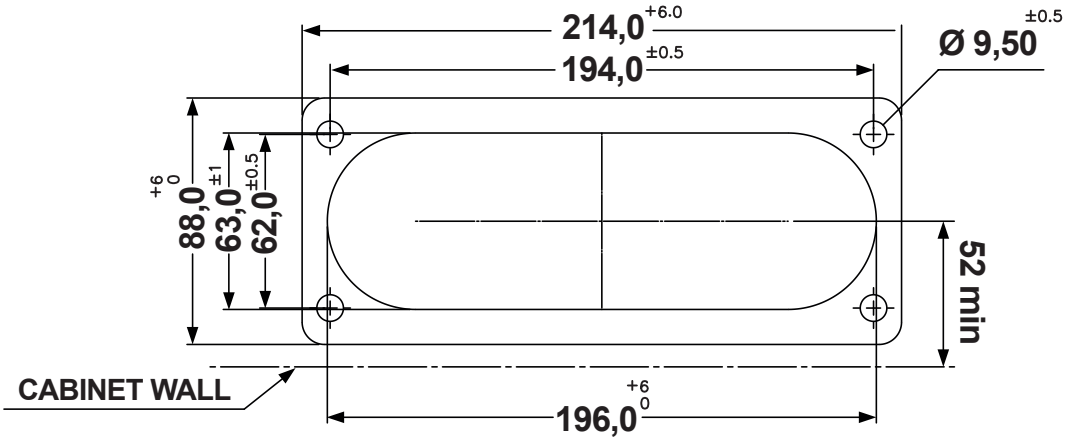

APERATURE DIMENSIONS FL 21
No. HOLES / Ø CABLE
2 (M16) / 5-10
2 (M25) / 8-17
2 (M20) / 6-13
20 / 4-10
WORKING TEMPERATURE: −20°C −+ 125°C

fastpoint

TITLE	PRECONFIGURED MODULAR GLAND PLATES IP65		
MATERIAL	PP re-inforced fiberglass and TPE	DATE	09/11/2017
		DRAWN	R.F.
COLOR	RAL9005	CHECK	
UNLESS OTHERWISE SPECIFIED TOLERANCE	SEE ABOVE	APPROVED	

PART NUMBER	DRAWING NUMBER		
9080FA019005	17.11.09.9080.0.E		
SIZE A4	SCALE NTS	UNIT mm.	REV A