DIM.	TOL.
5mm DOWN	±0.2
5～20mm	±0.3
20～40mm	±0.4
40～60mm	±0.5
60～100mm	±0.8
100mm UP	±1.0

REVISIONS			
REV	DESCRIPTION	DATE	BY

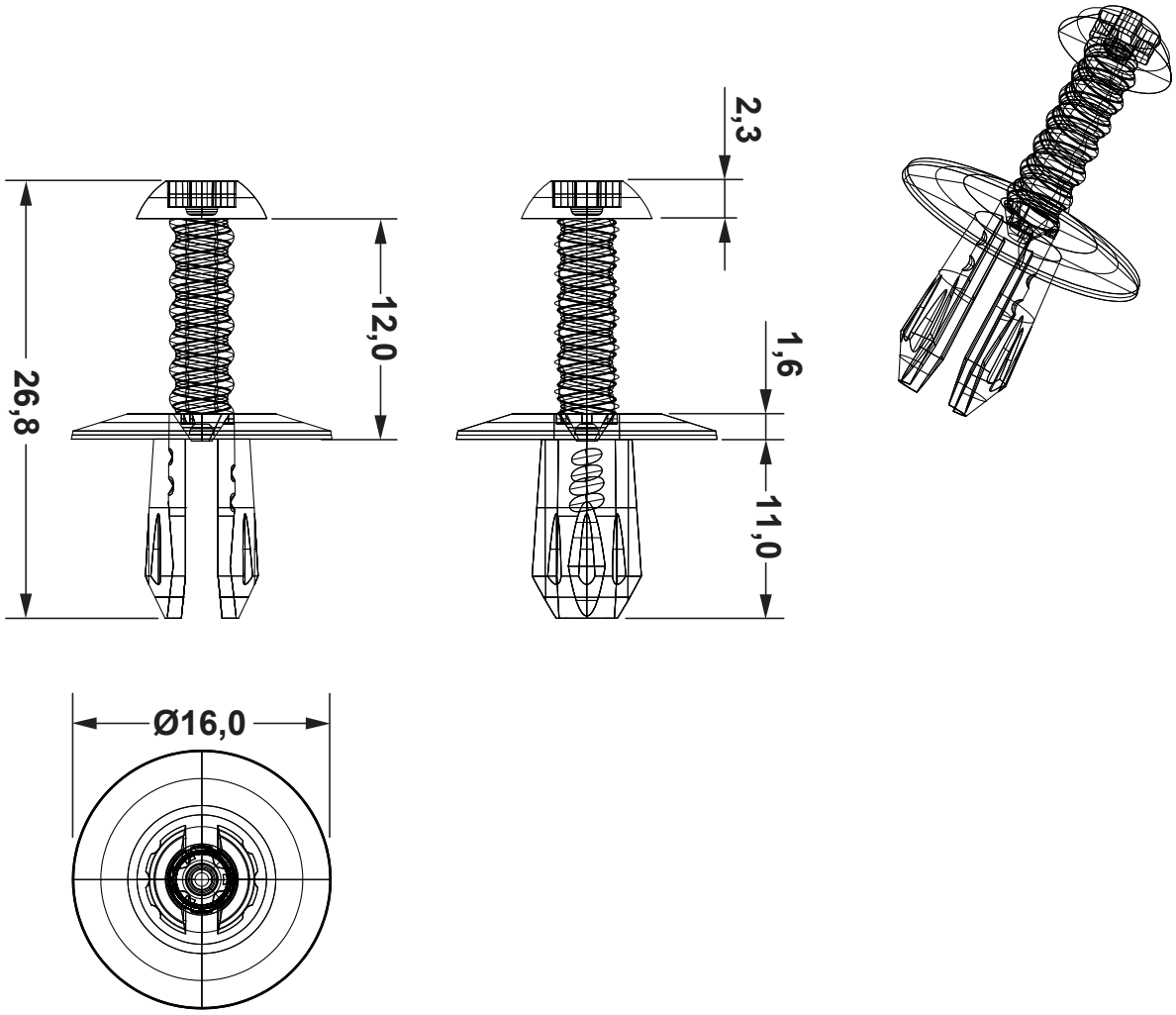

MOUNTING HOLE: Ø 6,5

PANEL RANGE: MIN 4,0 - MAX 6,5

fastpoint

TITLE	SCRIVET
MATERIAL	PA66 V2(UL94)
DATE	27/02/2018
DRAWN	R.F.
COLOR	BLACK
CHECK	
UNLESS OTHERWISE SPECIFIED TOLERANCE	SEE ABOVE
APPROVED	
PART NUMBER	8116AA01
DRAWING NUMBER	18.02.27.8116.0.E
SIZE	A4
SCALE	NTS
UNIT	mm.
REV	A