DIM.	TOL
5mm DOWN	±0.2
5~20mm	±0.3
20~40mm	±0.4
40~60mm	±0.5
60~100mm	±0.8
100mm UP	±1.0

REVISIONS			
REV	DESCRIPTION	DATE	BY

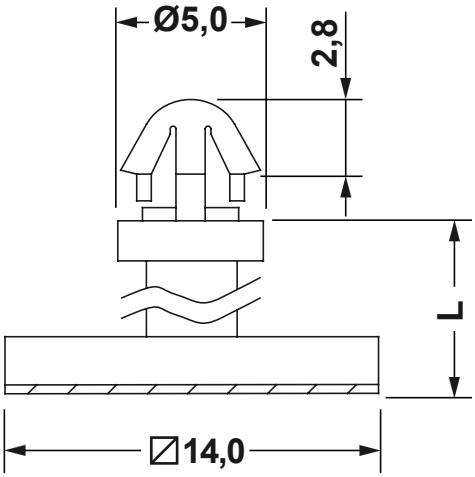

HOLE: Ø3,5
PANEL THICKNESS: 1,2 - 1,6

P/N	L
6375AA00AS	3,5
6376AA00AS	4,8
6377AA00AS	6,4
6378AA00AS	8,0
6379AA00AS	10,0
6380AA00AS	12,7

fastpoint

TITLE: SELF-ADHESIVE P.C.B. SPACER			
MATERIAL: PA6.6 V2(UL94)		DATE: 26/11/2018	
ADESIVO:		DRAWN: R.F.	
PART NUMBER: SEE TABLE	DRAWING NUMBER: 18.11.26.63XX.0.E	COLOR: NATURAL	CHECK:
SIZE: A4 / SCALE: NTS	UNIT: mm / REV: B	UNLESS OTHERWISE SPECIFIED TOLERANCE: SEE ABOVE	APPROVED: