DIM.	TOL.
5mm DOWN	±0.2
5~20mm	±0.3
20~40mm	±0.4
40~60mm	±0.5
60~100mm	±0.8
100mm UP	±1.0

REVISIONS			
REV	DESCRIPTION	DATE	BY

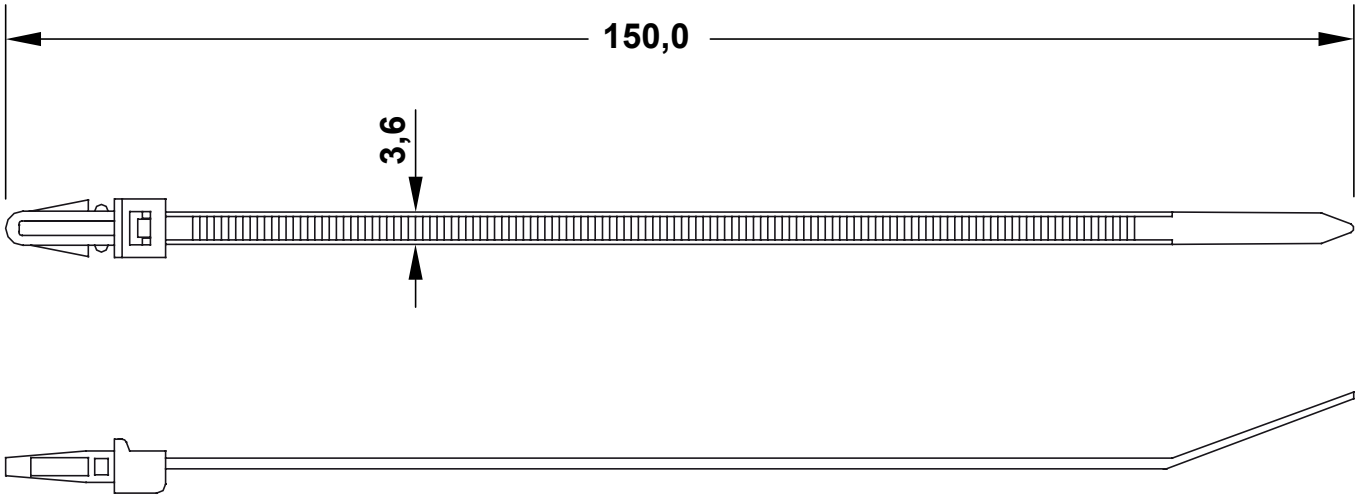

MOUNTING HOLE Ø5,2
PANEL THICKNESS 1,0 - 2,8
MAX. CABLE DIAMETER Ø32,0
MIN. LOOP TENSILE STRENGHT 13,6KG

	DESCRIPTION	
	MATERIAL: PA 6.6 V2(UL94)	
	COLOUR: NATURAL	
REV.		DATE

TITLE: **PUSH MOUNT TIES**

DWG UNIT: MM

Modelled in RHINO 4.0

TOLLERANCES UNLESS NOTED

SEE ABOVE

FILE:

SHEET: 1 OF 1

SCALE: NTS

DwN: 24/05/19

DT: 19.05.24.2501.0.E.

ChkD:

Part Number: 2501AA00

fastpoint