DIM.	TOL.
5mm DOWN	±0.2
5～20mm	±0.3
20～40mm	±0.4
40～60mm	±0.5
60～100mm	±0.8
100mm UP	±1.0

REVISIONS			
REV	DESCRIPTION	DATE	BY

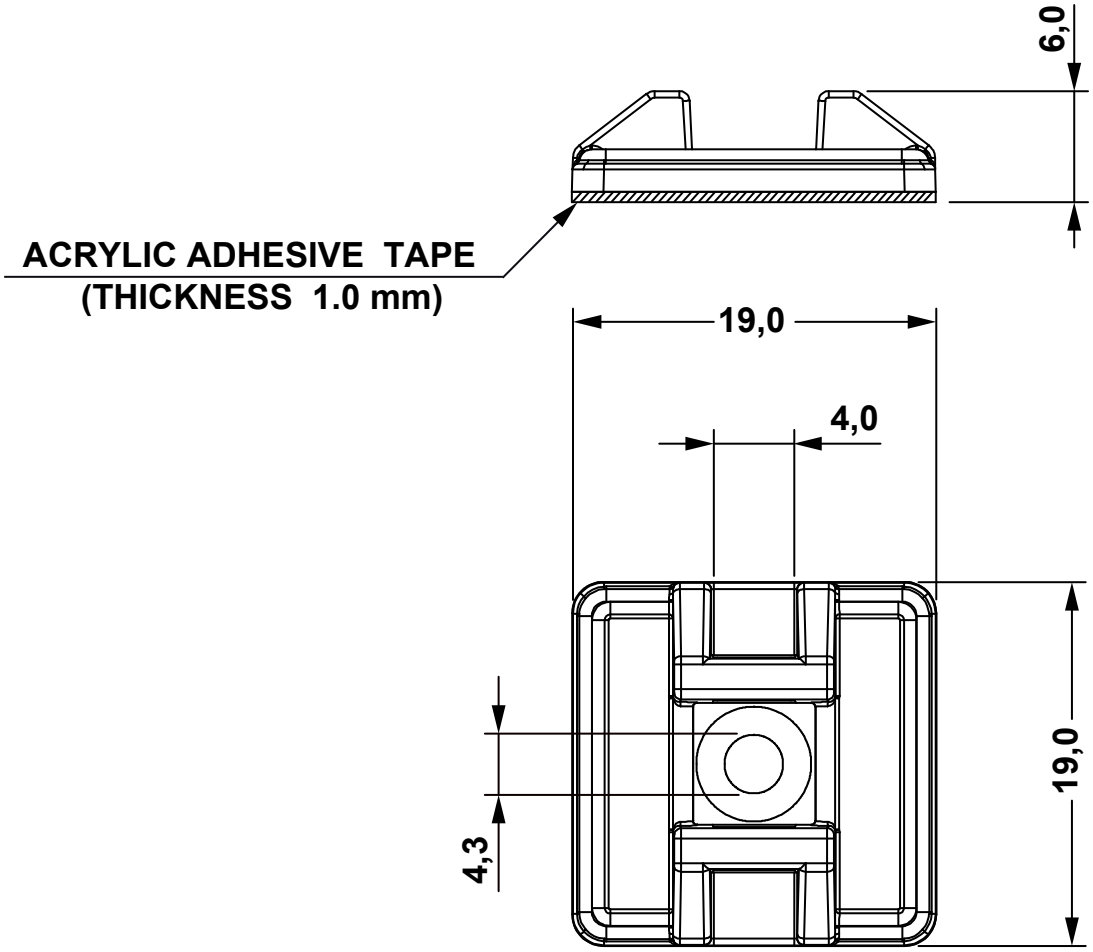

	DESCRIPTION	
	MATERIAL: ABS	
	COLOUR: NATURAL	
REV.		DATE

TITLE:	SELF-ADHESIVE BASE		DWG UNIT: MM
Modelled in RHINO 4.0	FILE:	DwN: 10/10/17	ChkD:
TOLLERANCES UNLESS NOTED	SHEET: 1 OF 1	DT: 17.10.10.8029.0.E.	Part Number: 8029HA00CS
SEE ABOVE	SCALE: NTS	fastpoint	