FASTPOINT SRL | Via Industria 27, Camponogara (VE)
T +39 041 462435 | F +39 041 463903
P IVA 01746590288 | Email: info@fastpointweb.it

PASACABLE DIVISIBLE CON ENTRADA DE 90°

Descripción Técnica

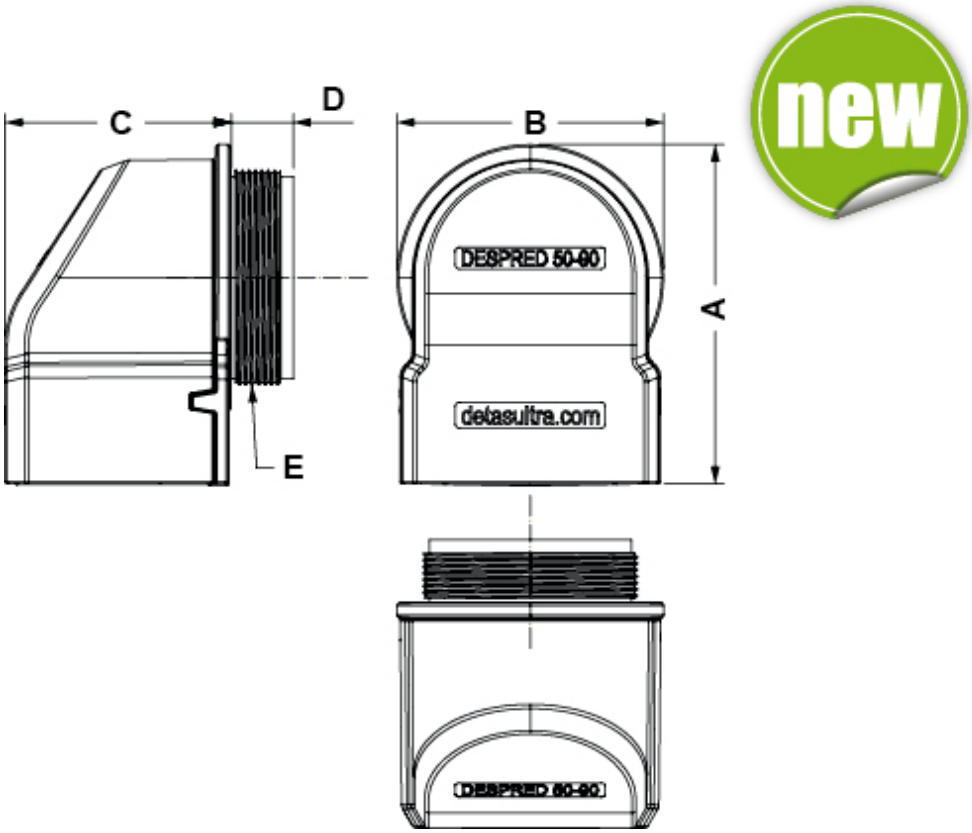

FASTPOINT SRL | Via Industria 27, Camponogara (VE)
T +39 041 462435 | F +39 041 463903
P IVA 01746590288 | Email: info@fastpointweb.it

Codigo	A	B	C	D	E	Orificio	Conf./piezas
16021AA01	79,0	62,0	52,6	14,5	M50 x 1,5	Ø50,5	10