FASTPOINT SRL | Via Industria 27, Camponogara (VE)
T +39 041 462435 | F +39 041 463903
P IVA 01746590288 | Email: info@fastpointweb.it

QUARTER TURN LATCH

Technical description

Material clip: PA 6.6
UL Flammability: V2 (UL 94)

Working temperature: -35°C ~ +85°C
Colour: Black or Natural

All dimensions are in mm.

To disassemble turn the head of the latch through 90° clockwise.

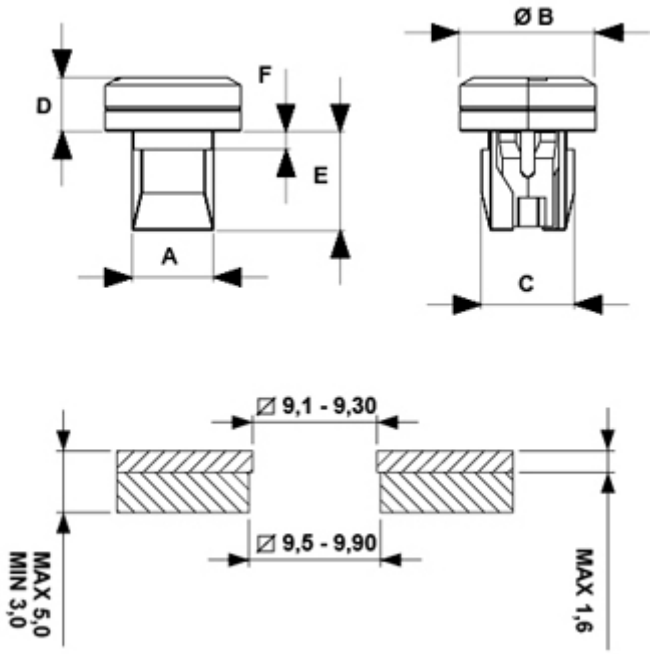

Code	A	B	C	D	E	F	Colour	MOQ-Pcs
8093AA01	9,0	15,0	10,3	6,0	11,0	2,0	Nero	1.000