FASTPOINT SRL | Via Industria 27, Camponogara (VE)
T +39 041 462435 | F +39 041 463903
P IVA 01746590288 | Email: info@fastpointweb.it

LED LIGHT PIPE

Technical description

Material: PC
Colour: Clear
Flammability: V2 (UL94)
Working temperature: -40°C ~ +80°C

All dimensions are in mm

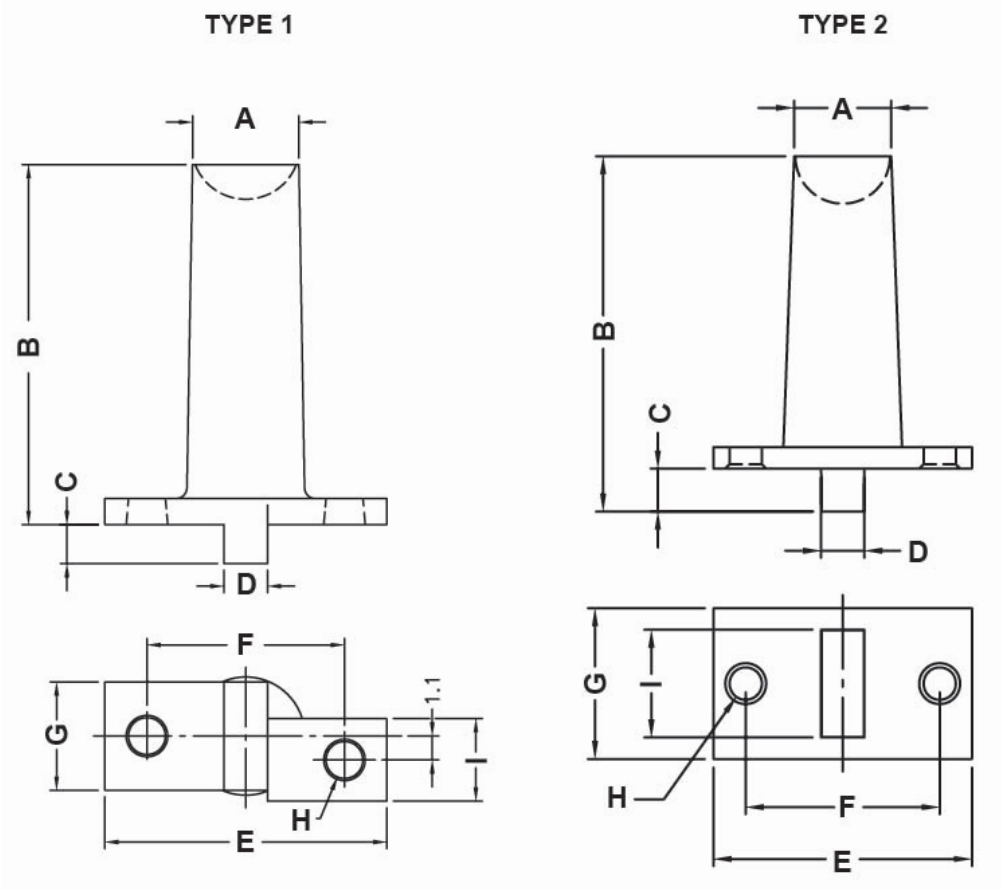

FASTPOINT SRL | Via Industria 27, Camponogara (VE)
T +39 041 462435 | F +39 041 463903
P IVA 01746590288 | Email: info@fastpointweb.it

Code	A	B	C	D	E	F	G	H	I	Type	MOQ-Pcs
14002NA00	Ø 4,9	16,6	1,8	2,0	13,0	9,1	5,0	Ø 1,7	3,8	1	1.000
14003NA00	Ø 4,9	16,6	2,2	2,0	13,0	9,1	5,0	Ø 1,7	3,8	1	1.000
14005NA00	Ø 4,5	16,5	2,0	2,0	12,0	9,0	7,0	Ø 1,5	5,0	2	1.000